ADJUSTABLE PARAMETERS

FRONT PANEL CONFIGURATION EDITOR (Factory default settings are shown in bold italicised text)

Section	Parameter as shown on display	Values
Input settings	Oil Pressure Pre Alarm	0 bar -4bar (**1.17bar**)
	Oil Pressure Shutdown	0 bar -4bar (**1.03bar**)
	High Coolant Temp Pre Alarm	80°C -140°C (**115°C**)
	High Coolant Temp Shutdown	80°C -140°C (**120°C**)
	Low Coolant Temp Alarm	67°C -137°C (***disabled***)
	Low Fuel Level Alarm	0%-100% (***disabled***)
Timers	Mains Transient Delay	0-10s (***2s***)
	Gen Transient Delay	0 -10s (***0s***)
	Start Delay	0 -60m (***5s***)
	Pre Heat Time	0 -60m (***0s***)
	Crank Time	0 -60s (***10s***)
	Crank Rest Time	0-60s (***10s***)
	Safety On Delay	0-30s (***10s***)
	Overspeed Overshoot Delay	0-10s (***0s***)
	Warm Up Time	0-60m (***0s***)
	Transfer Delay	0-10s (***0.75s***)
	Return Delay	0 -60m (***30s***)
	Cooling Run Time	0-60m (6***0s***)
	Fail To Stop Delay	0-30s (***30s***)
	Low Battery Delay	0-10m (***1m***)
	High Battery Delay	0-10m (***1m***)
	Gen Reverse Power Delay	0-30s (***2s***)
Mains	Mains Under Voltage Alarm	50V-360V ph-N (**184V**)
	Mains Over Voltage Alarm	50V-360V ph-N (***277V***)
	Mains Under Frequency Alarm	0Hz -75Hz (***45Hz***)
	Mains Over Frequency Alarm	0Hz -75Hz (***55Hz***)
Generator	Generator Under Voltage Shutdown	50V-360V ph-N (**184V**)
	Generator Under Voltage Pre Alarm	50V-360V ph-N (***196V***)
	Generator Nominal Voltage	52V-330V(***230V***)
	Generator Over Voltage Pre Alarm	50V-360V ph-N (***265V***)
	Generator Over Voltage Shutdown	50V-360V ph-N (***277V***)
	Generator Under Frequency Shutdown	0Hz -75Hz (***40Hz***)
	Generator Under Frequency Pre Alarm	0Hz -75Hz (***42Hz***)
	Generator Nominal Frequency	0Hz – 74Hz (***50Hz***)
	Generator Over Frequency Pre Alarm	0 -75Hz (***55Hz***)
	Generator Over Frequency Shutdown	0 -75Hz (***57Hz***)
	Generator Over Current Trip	100-200% full load rating (***100%***)
	Generator Short Circuit Trip	50%-300% full load rating (***200%***)
	Generator Reverse Power Trip	0%-200% full load rating (***35kW***)
	Earth Fault Trip	1%-100% full load rating (***10%***)
Engine	Engine Underspeed Shutdown	0-6000RPM (***disabled***)
	Engine Underspeed Pre Alarm	0-6000RPM (***disabled***)
	Engine Overspeed Pre Alarm	0-6000RPM (***disabled***)
	Engine Overspeed Shutdown	0-6000RPM (***disabled***)
	Overspeed Overshoot	0-10 (***0%***)
	Plant Battery Under Volt Alarm	0-24V (***10V***)
	Plant Battery Over Volt Alarm	0-24V (***30V***)
	Charge Alternator Failure Alarm	0-24V (***6V***)
AC System	Alternative Frequency	Enable, ***Disable***
	Alternative Voltage	Enable, ***Disable***
	AC System	***3 Phase 4 wire*** 1 Phase 2 wire 3 phase 3 wire 2 phase 3 wire L1 & L2 3 phase 4 wire ED 2 phase 3 wire L1 & L3
	Generator Full Load Current	0-6000A ***(500A)***
	Droop	Enable, ***Disable***
	Droop %	***0***-5% (only when CAN is enabled)
Display	Contrast	☐ | ■
Clock	Date and Time	dd mmm yyyy hh:mm:ss
Misc.	Run Priority	1-16 ***(1)***
	Auto Scroll Time	0-10s (***2.0s***)
CT	Generator CT Primary Rating	5-6000A ***(600A)***
	Generator CT Secondary Rating	1A, ***5A***
	Mains CT Primary Rating	5-6000A ***(600A)***
	Mains CT Secondary Rating	1A, ***5A***
Power	Full kW Rating	5-6000kW ***(345kW)***
	Full kVAr Rating	5-6000 ***(258kVAr)***
	Load Ramp Rate	0.1-100% ***(5.0%)***
	Load Parallel Power	0.1-100% ***(172kW)***
	Load Power Factor	0.02-100% ***(1.0pfF 0kVAr 0%)***

5520 INSTALLATION INSTRUCTIONS

ACCESSING THE FRONT PANEL CONFIGURATION EDITOR

- Press the Stop/Reset and Info buttons simultaneously
- If a module security PIN has been set, the PIN number request is then shown (The first * is flashing) :
- Press + or – buttons to adjust it to the correct value. Press ✓ when the first digit is correctly entered. Repeat this process for the other digits of the PIN number.
- When ✓ is pressed after editing the final PIN digit, the PIN is checked for validity. If the number is not correct, the editor is automatically exited. To retry you must re-enter the editor as described above.
- If the PIN has been successfully entered (or the module PIN has not been enabled), CONFIGURATION is displayed :

EDITING A PARAMETER

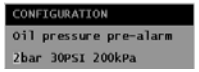

- Enter the editor as described above.
- Press the **+** and **–** buttons to cycle to the parameter you wish to change.
- Press the ✓ button to enter edit mode. When in edit mode (indicated by the flashing parameter)
- Pressing the **+** and **–** buttons will adjust the parameter to the desired value.
- For *date and time* editing only: press to select between day, month, year, hours and minutes.
- Press the ✓ button to 'save' the value. The value will stop flashing to confirm that it has been saved.
- To select another value to edit, press the **+** button. Continuing to press the **+** and **–** buttons will cycle through the adjustable parameters as shown overleaf.
- To exit the front panel configuration editor at any time, press the Stop/Reset button. Ensure you have saved any changes you have made by pressing the ✓ button first.

⚠NOTE:- When the editor is visible, it is automatically exited after 5 minutes of inactivity to ensure security.

⚠NOTE:- The PIN number is automatically reset when the editor is exited (manually or automatically) to ensure security.

⚠NOTE:- More comprehensive module configuration is possible using the 5xxx series PC configuration software in conjunction with the P810 PC interface. Please contact us for further details.

⚠NOTE:- Languages are subject to change as the modules are updated. Please contact us for the list of latest supported languages.

Deep Sea Electronics Plc.
Highfield House, Hunmanby Industrial Estate,
North Yorkshire. YO14 0PH. ENGLAND
Tel +44 (0)1723 890099.
Fax +44 (0)1723 893303.
LoCALL (uk only) Tel 0845 260 8900
LoCALL (uk only) Fax 0845 260 8901
Email: sales@deepseaplc.com
Web: www.deepseaplc.com

Deep Sea Electronics Inc.
3230 Williams Avenue
Rockford, IL 61101-2668. U.S.A.
Tel +1 (815) 316-8706
Fax +1 (815) 316-8708
TOLL FREE (USA only) Tel.1 866 636 9703

Email: dsesales@deepseausa.com
Web: www.deepseausa.com

TYPICAL WIRING DIAGRAM

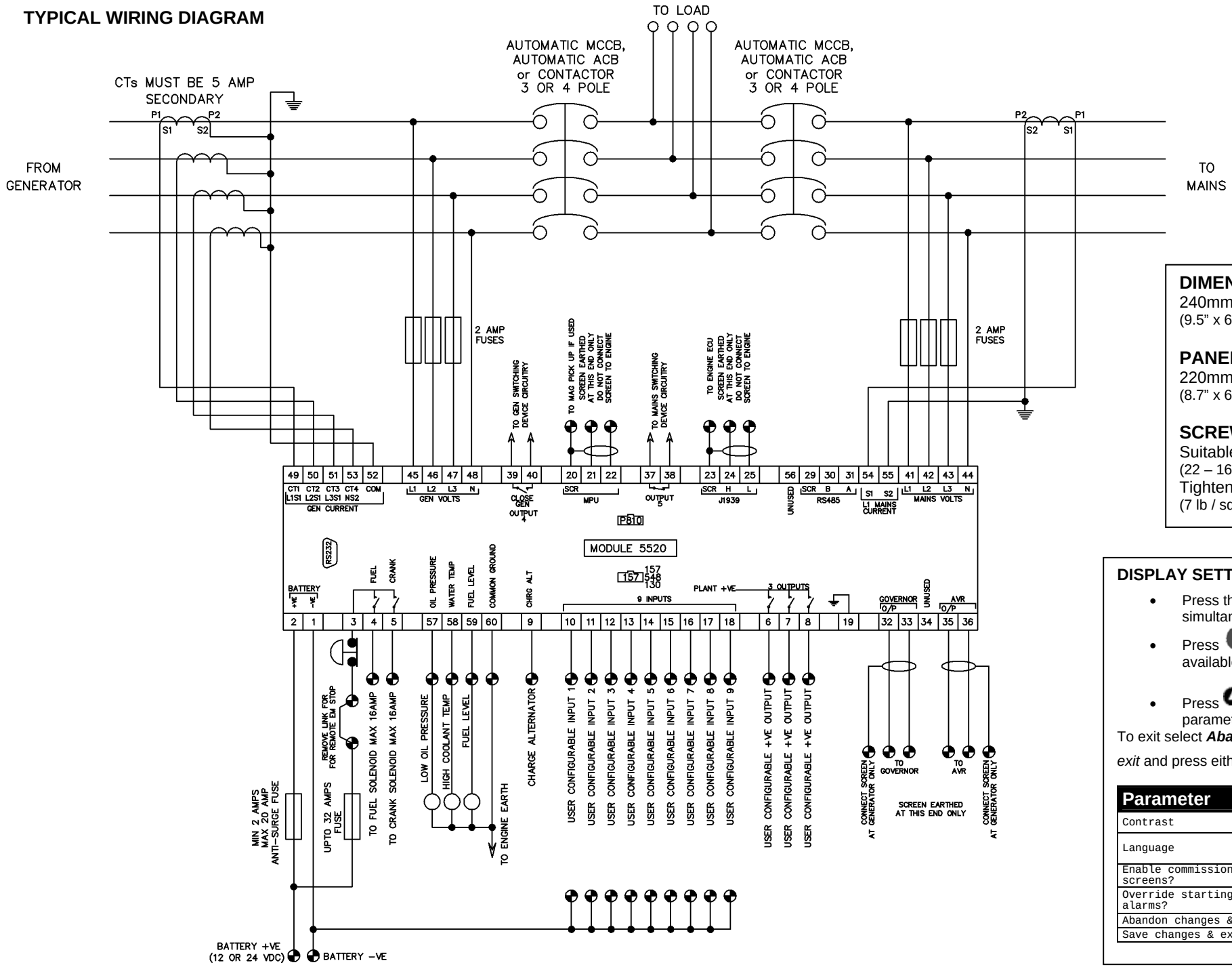

DIMENSIONS
240mm x 172mm x 57mm
(9.5” x 6.8” x 2.25”)

PANEL CUTOUT :
220mm x 160mm
(8.7” x 6.3”)

SCREW TERMINALS
Suitable for : 0.6mm² - 1.3mm²
(22 – 16 AWG)
Tightening torque : 0.8Nm
(7 lb / sq in)

DISPLAY SETTINGS

- Press the ▲▼ buttons simultaneously to enter the editor.
- Press ⓘ button to cycle round the available parameters.
- Press ▲▼ to change the visible parameter.

To exit select ***Abandon*** or ***Save*** *changes and exit* and press either ▲▼ button.

Parameter	Values
Contrast	☐ | ■
Language	***ENGLISH***, OTHERS
Enable commissioning screens?	YES, ***NO***
Override starting alarms?	YES, ***NO***
Abandon changes & exit	
Save changes & exit	